The electrical equipment contained in this box should not be disposed of in unsorted municipal waste but collected separately. This is intended to reduce the impact on the environment by minimising the level of waste generated at the end of a product's useful life by increasing the percentage of material recovered and recycled.

Regency House
Kingsclere Park
Kingsclere
Newbury
Berkshire RG20 4SW

Tel: 01635 299266

www.ferrob.co.uk

UAX150T Extract Fan with Timer

Installation and Operation Instructions

FERROB
ENVIRONMENTAL SYSTEMS

INSTALLATION

THROUGH A WALL

1. It is recommended that the unit is installed not less than 1.75m from the floor and is not installed directly above a heat source. i.e. radiator etc.
2. Cut a 162mm diameter hole in the wall ensuring that the hole slopes slightly to the outside to prevent any water from running back into the sleeve.
3. Fit the plastic wall sleeve and drill, plug and screw the body of the fan into position ensuring that the sleeve is fitted over the fan spigot.
4. Place the external grille into position and then drill, plug and screw into place.

THROUGH A WINDOW

1. It is recommended that the unit is installed not less than 1.75m from the floor and is not installed directly above a heat source. i.e. radiator etc.
2. Cut a 185mm hole in the glass. (Double glazed windows will have to be replaced with the hole pre-cut by the window manufacturer.)
3. Using the window kit (available separately) fix the kit to the window by screwing the internal mounting plate to the external grille ensuring the rubber gasket supplied is fixed around the edges of both the grille and plate. The fan can then be fixed to the mounting plate.

THROUGH A CEILING

1. Cut a 162mm hole in the ceiling ensuring that the hole is central between joists.
2. Using suitable fasteners, fix the fan body into position over the hole.
3. Affix the ducting to the fan spigot.
4. Connect the other end of the ducting as required to a suitable outlet. (soffit grille etc)

Ferrob Ltd also recommends the fitting of a condensation trap when connected to a vertical run of ducting.

ELECTRICAL CONNECTION

All wiring must comply with the latest edition of the IEE wiring regulations. If in any doubt, contact a registered or approved electrician.

A means for disconnection from the supply having a contact separation of at least 3mm in all poles must be incorporated into the fixed wiring.

The unit is rated at a maximum power consumption of 20watts.

OPERATION

THE UAX 150T EXTRACTOR FAN IS FITTED WITH AN OVER-RUN TIMER DESIGNED FOR USE IN CONJUNCTION WITH A LIGHT SWITCH OR OTHER MEANS OF EXTERNAL CONTROL.

1. When the remote switch / light is activated the unit will begin running after approx 2 minutes.
2. After this time, the fan will run for as long as the remote switch / light is turned on.
3. When this external control is turned off, the fan will continue to run for 15 minutes.

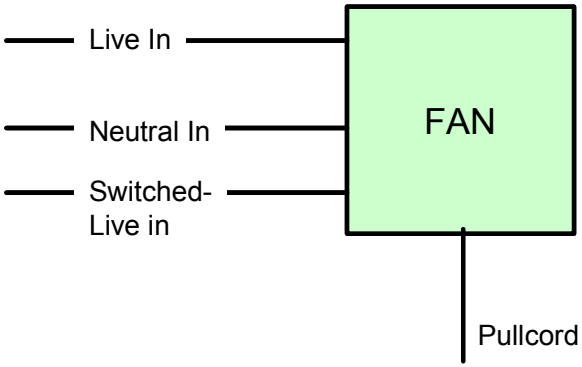

230V 50Hz

Single Speed 20W

CE IPx4